Application Note
AN 07-006

SEMIKRON DANFOSS

Revision:	01
Issue date:	2024-11-06
Prepared by:	Joachim Lamp
Approved by:	Ingo Rabl

Keyword: IGBT module, snubber capacitor, peak voltage

IGBT Peak Voltage Measurement and Snubber Capacitor Specification

1. General 1
2. Capacitor Parameter 3
   2.1 DC voltage class 3
   2.2 Capacitance and series inductance 3
   2.3 Pulse handling 3
   2.4 RMS voltage and RMS current 4
   2.5 Lifetime 4
   2.6 Self-healing 4
3. Measurements and Verification 4
   3.1 Voltage stress of IGBTs (V_{CEpeak}) 4
      3.1.1 Measurement procedure 5
      3.1.2 Grounding and voltage probe connections: 5
   3.2 Measuring capacitor RMS current 7
      3.2.1 Measurement procedure 7
   3.3 Temperature and self-heating during operation 9

This application note provides information on how to select and test snubber capacitors for IGBT modules in high power applications and how to test the effectiveness. This information should help to prevent failure of the IGBT module and snubber capacitor caused by electrical or thermal overstress. The information given in this application note contains tips on which parameter of the capacitor should be considered and how to carry out the necessary measurements.

1. General

If high currents are switched fast, then voltage overshoots occur, which can destroy the switching power semiconductor. The voltage overshoot is caused by the energy stored in the magnetic field of the current path (e.g. DC-link connections). It is linked by the value of the parasitic inductance or stray inductance L_S ($E=0{,}5*L_S*i^2$). The voltage ($V=L_S*di/dt$) may exceed the maximum blocking voltage of the power semiconductor (V_{CES}, V_{RRM}…) because it is added to the DC-link voltage. The first countermeasure is a good low inductive DC-link design to keep the voltage on the semiconductor low. This is done by means of a laminated bus bar system (sandwich of +DC, –DC metal sheets and an insulation layer between) and short connections between the voltage source (DC-link capacitor) and power semiconductor. In addition, snubber capacitors are recommended, which should be mounted directly on the DC-link terminals of each IGBT module. This snubber works as a low-pass filter and "takes over" the voltage overshoot. Figure 1 shows typical designs. The waveform in Figure 2 shows in comparison the voltage across an IGBT at turn-off with and without snubber capacitor. The effect of voltage spike reduction can be seen clearly. Figure 3 shows an equivalent circuit with parasitic inductances.

Figure 1: Low inductance snubber capacitors for mounting on IGBT modules

In order to decide whether a snubber capacitor is necessary, the maximum collector-emitter voltage (V_{CEpeak}) of the IGBT has to be checked under worst case conditions to be sure that V_{CES} will not be exceeded under any operating condition. If necessary, several aspects have to be considered when choosing the right snubber capacitor for the application:

- Capacitor DC-voltage class.
- Capacitance value and series inductance
- Pulse handling capability.
- RMS voltage and RMS current
- Lifetime

Figure 2: Typical waveform of V_{CE} voltage of an IGBT during turn-off (black trace: without snubber capacitor; brown trace: with snubber capacitor)

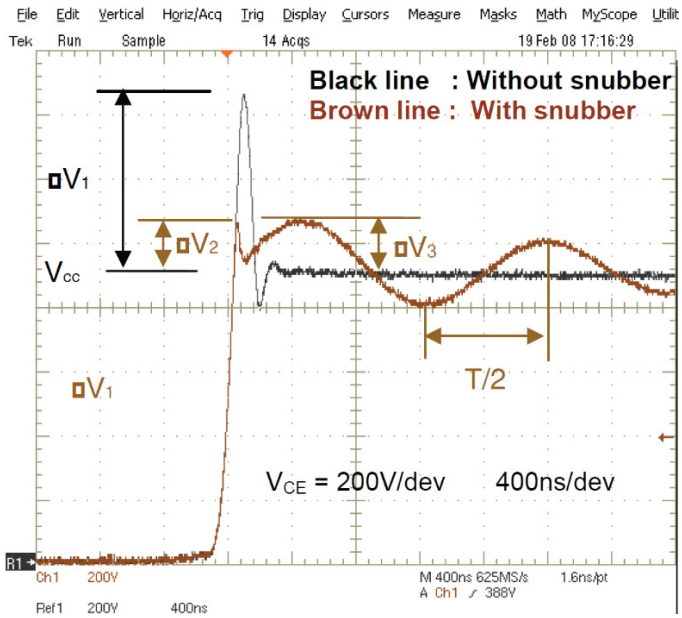

$$\Delta V_1 = \Sigma L \cdot di_c / dt$$

$$\Delta V_2 = (L_C + L_E + L_{Snubber}) \cdot di_c / dt$$

$$\Delta V_3 \leq \sqrt{\frac{L_{DC-Link} \cdot i_c^2}{C_{Snubber}}}$$

$$f = \frac{1}{T} = \frac{1}{2 \cdot \pi \cdot \sqrt{L_{DC-Link} \cdot C_{Snubber}}}$$

$$\Sigma L = L_C + L_E + L_{DC+} + L_{DC-} + L_{ESR}$$

$$L_{DC-Link} = L_{DC+} + L_{DC-} + L_{ESR}$$

Figure 3: Equivalent circuit diagram if an IGBT module connected to DC-link and to snubber capacitor

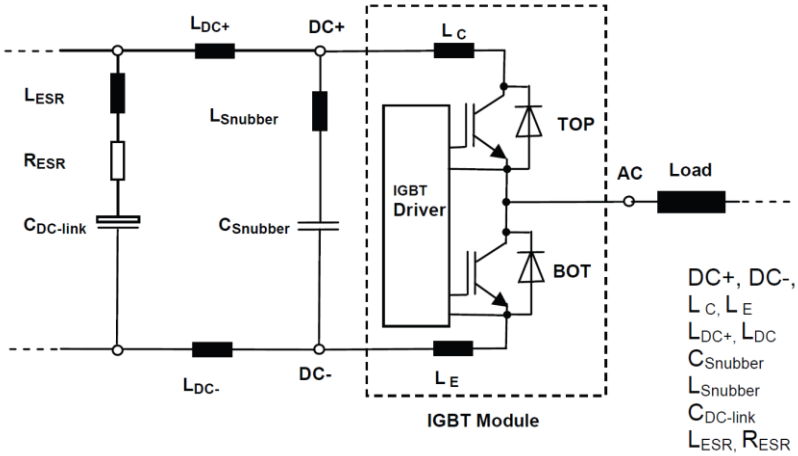

DC+, DC-, AC	IGBT module terminals
L_C, L_E	IGBT module parasitic inductance
L_{DC+}, L_{DC}	Bus bar parasitic inductance
$C_{Snubber}$	Snubber capacitor capacitance
$L_{Snubber}$	Snubber capacitor series inductance
$C_{DC-link}$	DC-link capacitor capacitance
L_{ESR}, R_{ESR}	DC-link capacitor parasitics

2. Capacitor Parameter

2.1 DC voltage class

The maximum continuously applied DC voltage can be the rated DC voltage given in the data sheet to achieve the life expectancy. Semiconductors with 1200V blocking voltage are used with up to 900V DC-link voltage. For these applications, capacitors with a rated voltage of 1000V are recommended. For 1700V semiconductors, 1250V or 1600V capacitors are recommended, depending on the DC-link voltage.
The peak voltage also has to be in the admissible values because otherwise the plastic film could be damaged. Permissible peak voltages are given in the data sheets or need to be requested. Consider also that the applied DC voltage has to be derated when the capacitor is operating at higher temperatures than the rated temperature.

2.2 Capacitance and series inductance

The capacitance value has to be high enough to achieve sufficient voltage spike suppression during switching off. Typical values for these capacitors are from 0.1 µF to 1.0 µF. But not only the capacitance value is important for this. Also a low inductive design of the capacitor is important. The remaining inductance, caused by the loop between the terminals and the internal connections of the capacitors is responsible for the first voltage spike V2 seen in Fig. 2. A high capacitance value is no guarantee for a low voltage spike if the self-inductance remains.
A low self-inductance can be achieved by using capacitors with wide flat terminals that can be screwed directly onto the IGBT module terminals. The capacitor should be designed so that the terminals encircle as small an area as possible and that they are directly connected to the capacitor coil without having internal wires between (see Figure 1).
The choice of the correct snubber should be determined by measurements. Furthermore, metallized polypropylene foil capacitors should be used with plastic case according to UL94V-0.

2.3 Pulse handling

The inner connections of the capacitor are capable of withstanding only a limited amount of energy at each switching event. The data sheets of the supplier specify limits for pulse operation as i^2t or v^2t values. These values can be calculated from the oscillating current or voltage waveform of the capacitor. This calculation can easily be carried out using modern digital oscilloscopes.
A capacitor failure can occur only because of very high peak currents, even when the involved voltages are lower than the specified ones. In this situation the critical thing is the involved energy and normally there will be a loss of connection between metal spray and film metallization. Because of the very high energy involved the film metallization will be vaporized on the connection area to the metal spray. This will lead the capacitor to a high loss factor or even to a capacitance loss. The maximum dv/dt values are less critical because of the damped sinusoidal waveform.

2.4 RMS voltage and RMS current

A damped oscillation occurs at each switching event (on or off = twice switching frequency of the IGBT) between the snubber capacitor and the bus bar capacitance. The maximum magnitude, V3, for an undamped oscillation and the frequency can be calculated using the formula in Figure 2. This RMS current leads to self-heating of the capacitor. The capacitor will stabilize at a certain temperature which also depends on the ambient temperature and on the mounting conditions (e.g. temperature of power module terminals). Data sheets give values for the permissible RMS current and RMS voltage depending on the frequency. The oscillating frequency depends on the DC-link stray inductance and the snubber capacitor value. Typical values are in the range of 100 kHz to 1 MHz. The permissible RMS current decreases with the frequency because the losses increase. Please see chapter "Measuring capacitor RMS current" which gives tips for practical current measurement on the capacitor.

2.5 Lifetime

The capacitor lifetime and failure rate are mainly affected by the operating temperature and operating voltage. The failure criteria differ from supplier to supplier. Check the data sheet and application notes for lifetime and failure rate data.

2.6 Self-healing

The most important reliability feature of film capacitors is their property to self-heal that means to clear a defect in the dielectric. The capacitor can be used afterwards without any restrictions. This defect is caused when the dielectric breakdown field strength is exceeded locally at a weak point in the foil.

3. Measurements and Verification

3.1 Voltage stress of IGBTs (V_{CEpeak})

The maximum value of V_{CES} must never be exceeded. Therefore, measurements have to be carried out to determine the maximum value of V_{CE} (also written as V_{CEpeak}) which can occur in the application. It should show that the module itself, the driver board (gate resistors), DC link and snubber capacitor perform well together with respect to V_{CEpeak}. It is proposed to investigate the following four working conditions:

- Maximum peak operating current of equipment.
- Over-current-trip (OCP) and short circuit (SC). Note: Different SC can occur in the application, e.g. on the load, on the cables to the load or inside the equipment close to the IGBT module. Typical SC inductance values are L>10µH for load SC and L<1µH for appliance terminal SC. This is just a short cable or hard connection. Tests should be started from higher inductances going down to the lowest. The highest voltage overshoot typically occurs when the IGBT switches off just before desaturation occurs. This is at low short circuit inductances when the over current detection switches off the IGBT just before desaturation occurs. The test should be carried out at low junction temperature and high junction temperature.
- Leg shot through (not applicable for SKiiP modules and drivers with interlock function); Note: TOP and BOT IGBT are switched on at the same time. In this case, desaturation occurs, which has to be detected and cleared by the driver board within the time stated on the IGBT data sheet. Different cases can be investigated:
  - TOP and BOT switch on at the same time,
  - TOP is already switched on and conducting current,

  when BOT is switching on (and vice-versa).
- Diode switch off.
  Note: Voltage spikes can occur at diode switch off, which can lead to high blocking voltage on the diode and the parallel connected IGBT. The worst case is mostly at low current (<10%*IC) and high temperature. The voltage must be measured on the diode which is switching off or on the parallel connected IGBT. Sometimes the snubber capacitor is more necessary for the diode switch off than for the IGBT switch off. Short on times of diodes can also cause voltage spikes if the chip is not fully floated with carriers.

The blocking voltage should be measured as close to the IGBT chip as possible. For SKiiP modules, the closest points are the module power terminals. For discrete power modules such as SEMiX and SEMITRANS auxiliary emitter contacts are available which are electrically closer to the chip. Voltages on internal module stray inductances between measurement point and IGBT chip must be added to the measured value to obtain the

actual blocking voltage at IGBT chip level. A practical approach for most applications is to carry out what is known as a "double pulse test" (see Figure 6). With different values of the load inductance and the pulse length, each load condition from low load to overload can be adjusted. A single pulse test with limited pulse length should be used for a short circuit. In these tests, the driver board receives its input signal from a pulse generator instead of the control board.

3.1.1 Measurement procedure

- DC-link is fed by an insulated DC voltage source which is limited in output current. Normally a few 100 mA is enough. Set the DC-link voltage to the highest possible value in the application. This is usually the value of over voltage protection.
- The short circuit is realized by thick cable from DC plus connection to AC for measuring BOT switch and from DC minus to AC for measuring on TOP switch. The inductance is given by the length of the wire; 1µH corresponds to about 1m length. The short circuit can also be caused by connecting the wire between two AC terminals of two different legs of an inverter circuit. One IGBT (e.g. TOP Phase L1) has to be permanently switched on while the pulse is applied to the other IGBT (e.g. BOT Phase L2).
- A pulse generator with adjustable pulse length is connected on the driver input. The pulse generator can be set to single pulse and double pulse.
- If the over current protection (OCP) is carried out by the control board and not the driver, then the control board OCP error signal must be monitored to find the point when the input signal would be set to off. This is not necessary for SKiiP modules because the OCP is implemented in the driver board.
- Start with the highest inductance. Carry out a single pulse, increase the pulse length until the OCP switches off. Measure the maximum value of V_{CE}.
- Lower the inductance and repeat the test down to the lowest short circuit inductance specified for the application. Find the maximum value of V_{CEpeak}.
- Carry out leg shot through if the driver has no interlock function.
- Apply a double pulse for investigation of IGBT switch on and diode switch off behavior. The diode (e.g. BOT) is switched off when the complementary IGBT (e.g. TOP) is switching on while the diode is conducting current. This is when the second pulse is applied.
- Carry out measurements on each IGBT module. Highest values occur on the module which is farthest from the DC link capacitors.
- Perform the test at low and high temperatures. A high temperature can be reached by heating the heat sink e.g. using a heating plate. The junction temperature is approximately the heat sink temperature because the temperature increase due to the single switching is negligible.

3.1.2 Grounding and voltage probe connections:

- Grounding the oscilloscope is necessary for safety and for taking accurate measurements. Therefore, the DC power source must be isolated to prevent a short circuit.
- Differential (isolated) voltage probes must be used because of the oscilloscope grounding. Bandwidth and common-mode rejection (CMR) of the voltage probe must be sufficient. For IGBT applications 100MHz bandwidth is usually sufficient.
- Common mode noise on the measured signals can also be reduced by putting appropriate ferrites across the probes and across the oscilloscope mains cable.

Figure 4: V_{CEpeak} measurement at BOT IGBT; TOP switch shortened by cable or inductor; double pulse applied to BOT IGBT

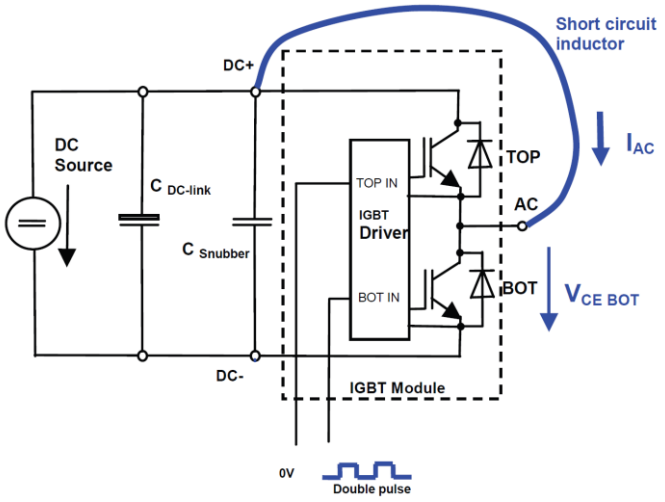

Figure 5: V_{CEpeak} measurement at TOP IGBT; BOT switch shortened by cable or inductor; double pulse applied to TOP IGBT

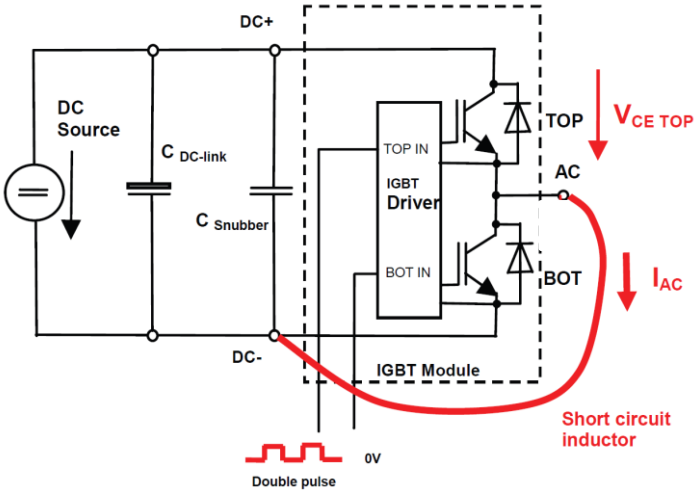

Figure 6: Typical double pulse waveforms

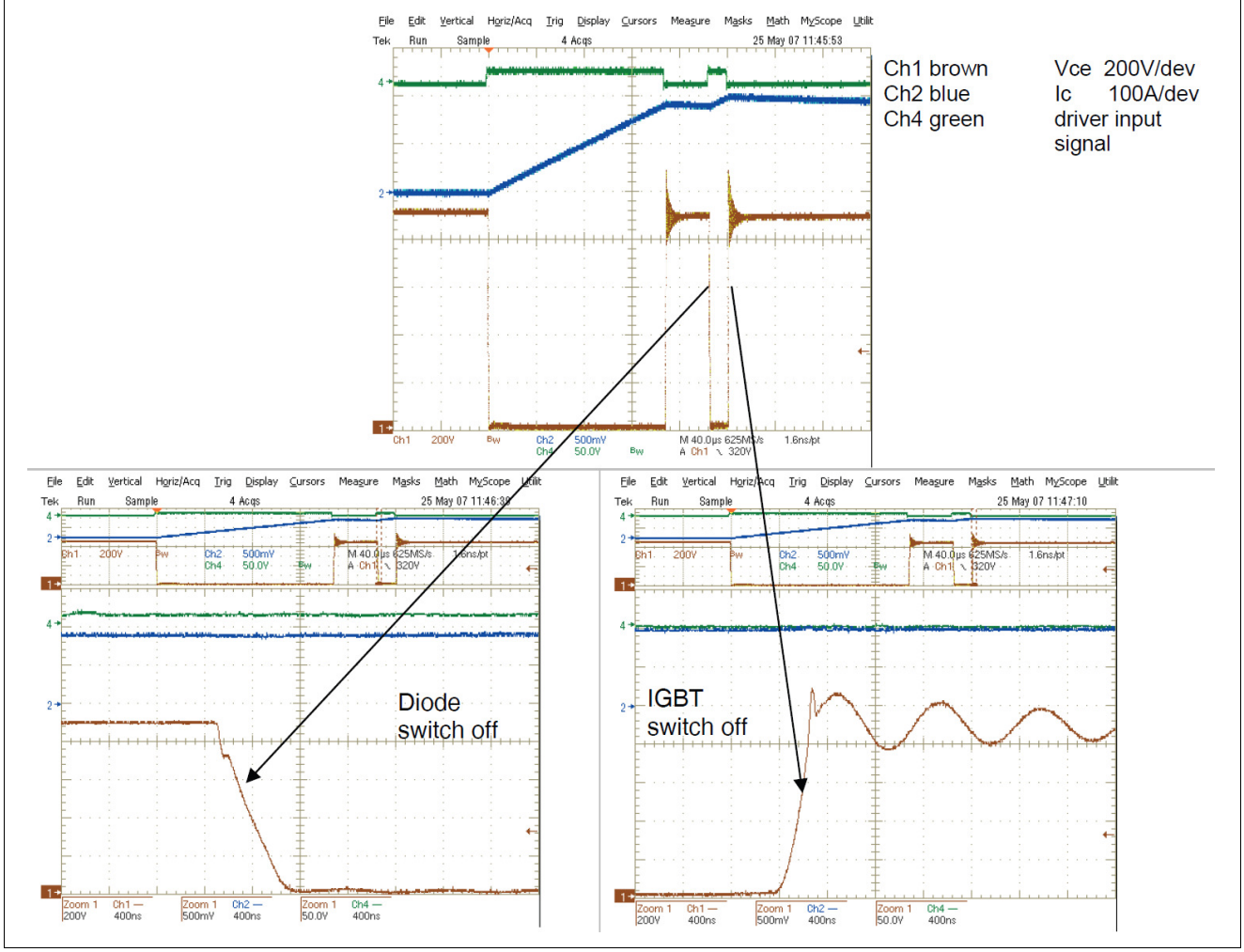

3.2 Measuring capacitor RMS current

An alternating current is flowing in the capacitor after switching off IGBT and diode. When switching off IGBT, the current from the bus bar commutates into the snubber capacitor. This leads to a positive peak current at the switching moment. This is followed by a damped oscillation between snubber capacitor and DC-link capacitor (Figure 7).
When switching off the diode, the reverse recovery current will be "pulled out" of the snubber capacitor. This leads to a peak current in negative direction at the switching moment. Like switching off IGBT, a damped oscillation follows that can even be higher in amplitude than at IGBT switch off (Figure 8).
The frequency of the damped oscillation in both cases is determined by the bus bar parasitic inductance and the snubber capacitor value. Typically, the frequency is in the range of 100 kHz up to several MHz.

$$f_{osc} = \frac{1}{T} = \frac{1}{2 \cdot \pi \cdot \sqrt{L_{DC-Link} \cdot C_{Snubber}}}$$

The oscillation leads to losses in the capacitor and consequently to self-heating. The data sheet of the capacitor supplier gives the permissible load of the capacitor as RMS voltage or RMS current. Measurements and calculations must be carried out to check that the capacitor is not overloaded in the operating system.

3.2.1 Measurement procedure

Current measurement carried out, for example, by a Rogowski current transducer surrounding the capacitor leg produces good results. An AC-voltage measurement can be less accurate because of its low value in comparison to the high DC-voltage.
The RMS value can often not be calculated simply by using the "RMS measure" function of a modern digital

oscilloscope over a whole period of inverter output frequency. The offset of the probes is too high in comparison to the low total RMS values to obtain accurate figures.
A practical approach is to measure the RMS value within the oscillation time at switch off of "BOT"-diode (t1) and "TOP"-IGBT (t2) (see Figure 9). These two parts are set according to the switching period ($T = 1/f_{sw}$) to calculate from this the total RMS value for the switching period. This has to be done for the whole sinusoidal waveform of a frequency converter. As a worst-case consideration, it can be done once at the maximum values of $I_{RMS}(t1)$ and $I_{RMS}(t2)$.

$$I_{RMS} = \sqrt{I_{RMS}^2(t1) \cdot \frac{t1}{T} + I_{RMS}^2(t2) \cdot \frac{t2}{T}}$$

With:

- IRMS(t1) = RMS value within period t1
- IRMS(t2) = RMS value within period t2
- T = switching period of the converter
- ω = angular frequency of oscillation

Figure 7: Switching off IGBT

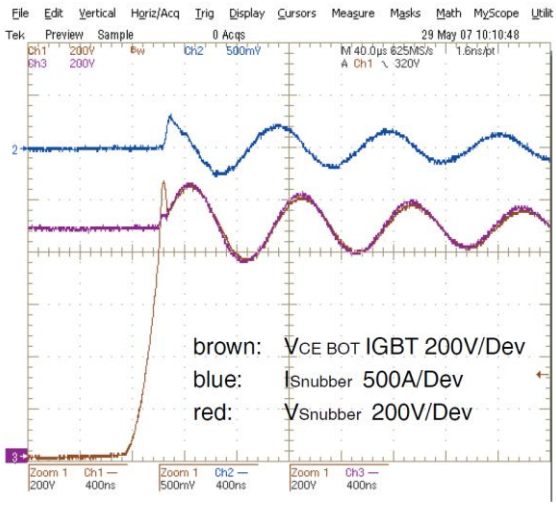

Figure 8: Switching off diode

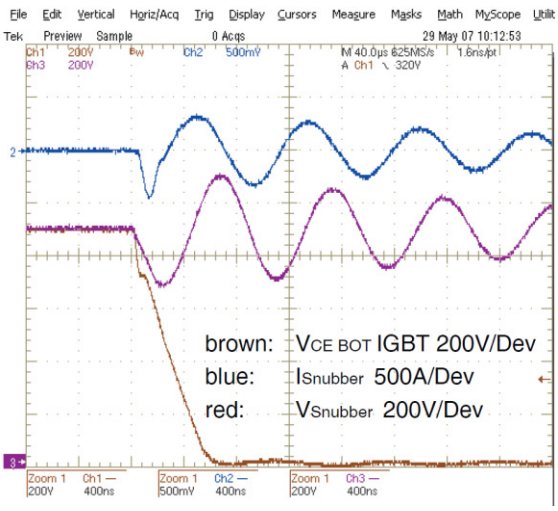

Figure 9: Measurement of snubber capacitor current

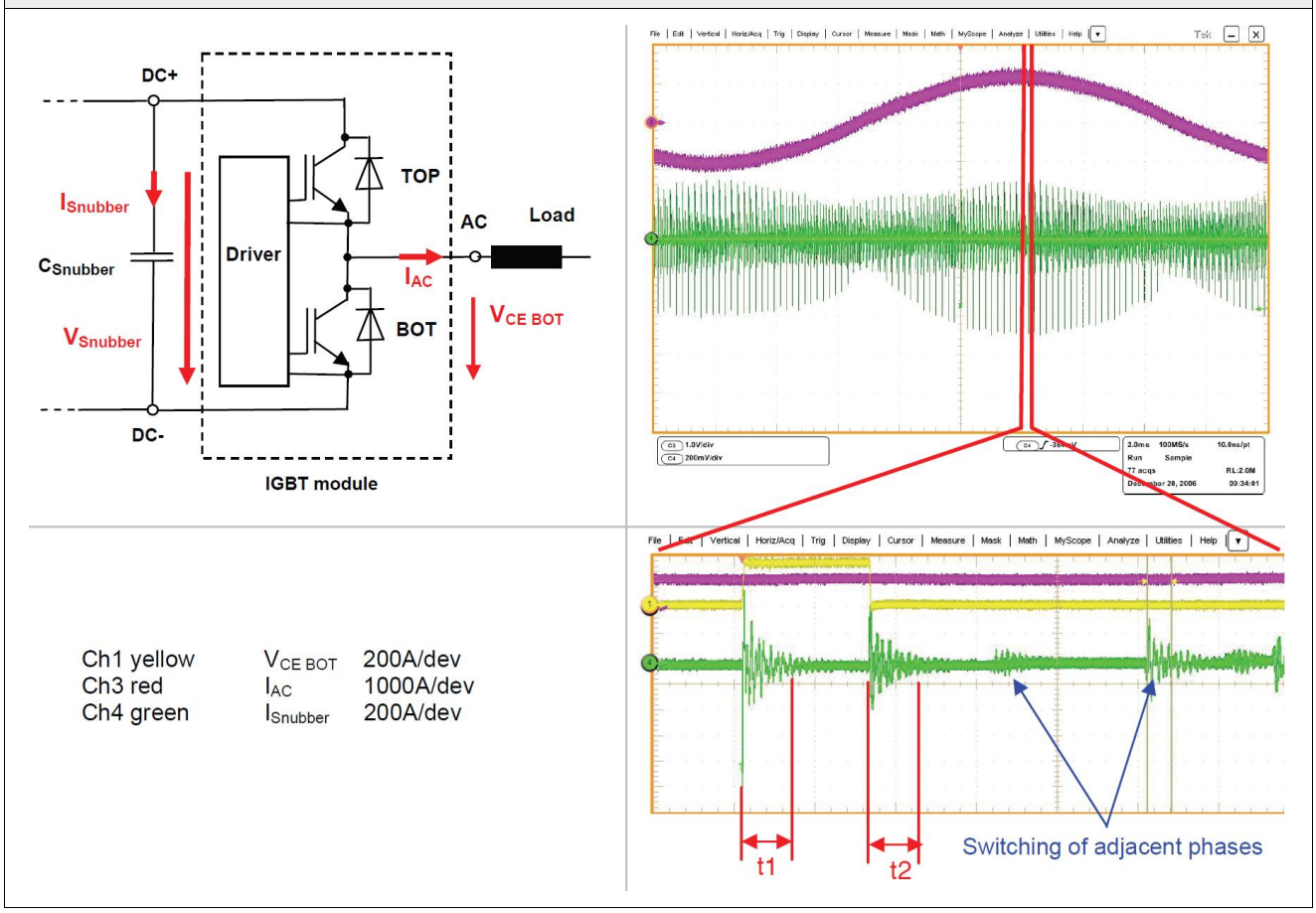

The measurements should be carried out at maximum thermal operating conditions. The corresponding highest diode junction temperature leads to the highest reverse recovery current. Maximum thermal operating conditions are the values of converter output current, switching frequency, ambient and heat sink temperature that gives the highest temperature. Short overloads in the second range are normally negligible. It should be taken into consideration that the permissible RMS voltage and current depend on the frequency of the oscillation. This is given in the data sheet of the capacitor.
The snubber capacitor is also stressed by adjacent IGBT modules from other phases at the same DC-link. However, this load is often much lower because of the bus bar impedance between the IGBT modules.

3.3 Temperature and self-heating during operation

Capacitor suppliers limit the admissible temperature of the capacitor during operation. The capacitor can fail immediately if this temperature is exceeded. Also the self-heating temperature is limited, which is a measure for the capacitor load. In critical applications, it has to be checked under maximum thermal operating conditions that the temperature is not exceeded.
The capacitor is heated by the following:

- AC current that heats the device up due to internal losses (tan δ / ESR)
- Environmental temperature
- Heating by high bus bar temperature.

The operating temperature is given by the ambient plus the temperature difference of the self-heating effect.

$$T_{Operation} = T_a + dT_{self-heating}$$

The ambient temperature T_a is the capacitor temperature when not in operation but mounted in original position. This temperature can be measured on a not connected dummy capacitor like the capacitor under

test. This temperature may be higher than the cabin temperature because of the additional heating due to connected hot bus bars.
The operating temperature can be measured by thermocouples which are placed inside the capacitor close to the hot spot, but this requires specially prepared capacitors. A measurement of the body temperature is sufficient when the temperature gradient from the hot spot to the body is known (Rth).

$$T_{Operation} = T_{body} + R_{th} \cdot I^2 \cdot R_{ESR}$$

Figure 1: Low inductance snubber capacitors for mounting on IGBT modules 2
Figure 2: Typical waveform of V_{CE} voltage of an IGBT during turn-off (black trace: without snubber capacitor; brown trace: with snubber capacitor) 2
Figure 3: Equivalent circuit diagram if an IGBT module connected to DC-link and to snubber capacitor..... 3
Figure 4: V_{CEpeak} measurement at BOT IGBT; TOP switch shortened by cable or inductor; double pulse applied to BOT IGBT..... 6
Figure 5: V_{CEpeak} measurement at TOP IGBT; BOT switch shortened by cable or inductor; double pulse applied to TOP IGBT..... 6
Figure 6: Typical double pulse waveforms..... 7
Figure 7: Switching off IGBT 8
Figure 8: Switching off diode..... 8
Figure 9: Measurement of snubber capacitor current..... 9

Symbols and Terms

Letter Symbol	Term
AC	AC terminal of power module
BOT	Lower IGBT in a bridge leg configuration
$C_{DC\text{-}link}$	Capacitance of the DC-link capacitor
$C_{Snubber}$	Capacitance of the snubber capacitor
-DC	Negative potential (terminal) of a direct voltage source
+DC	Positive potential (terminal) of a direct voltage source
di/dt	Rate of rise and fall of current
dv/dt	Rate of rise and fall of voltage
E	Energy
f_{osc}	Frequency of a resonant circuit
f_{sw}	Switching frequency
IGBT	Insulated Gate Bipolar Transistor
I_{AC}	AC terminal current
I_C,i_C	Collector current of an IGBT
L_C	Internal parasitic inductance of the collector terminal
$L_{DC+/DC-}$	Bus bar parasitic inductance
L_E	Internal parasitic inductance of the emitter terminal
L_{ESR}	Internal equivalent series inductance of DC link capacitor
L_S	Parasitic inductance / stray inductance
$L_{Snubber}$	Internal parasitic inductance of the capacitor
OCP	Over current protection
R_{ESR}	Internal equivalent series resistance of DC link capacitor
R_{th}	Thermal resistance between capacitor coil and body
SC	Short circuit

Letter Symbol	Term
SKiiP	Semikron integrated intelligent Power module
T	Period time
T_a	Ambient temperature
T_{body}	Body temperature of the capacitor
TOP	Upper IGBT in a bridge leg configuration
$T_{Operation}$	Operation temperature
V_{CC}	Collector-emitter supply voltage
V_{CE}	Collector-emitter voltage of an IGBT
V_{CES}	Maximum collector-emitter voltage of an IGBT with shorted gate
V_{CEpeak}	Peak value of collector-emitter voltage in application
V_{RRM}	Repetitive maximum reverse voltage of a diode

A detailed explanation of the terms and symbols can be found in the "Application Manual Power Semiconductors" [2].

References

[1] www.semikron-danfoss.com
[2] A. Wintrich, U. Nicolai, W. Tursky, T. Reimann, “Application Manual Power Semiconductors”, 2nd edition, ISLE Verlag 2015, ISBN 978-3-938843-83-3

IMPORTANT INFORMATION AND WARNINGS

The information provided in this document may not be considered as any guarantee or assurance of product characteristics ("Beschaffenheitsgarantie"). This document describes only the usual characteristics of Semikron Danfoss products to be expected in typical applications, which may still vary depending on the specific application. Therefore, products must be tested for the respective application in advance. Resulting from this, application adjustments of any kind may be necessary. Any user of Semikron Danfoss products is responsible for the safety of their applications embedding Semikron Danfoss products and must take adequate safety measures to prevent the applications from causing any physical injury, fire or other problem, also if any Semikron Danfoss product becomes faulty. Any user is responsible for making sure that the application design and realization are compliant with all laws, regulations, norms and standards applicable to the scope of application. Unless otherwise explicitly approved by Semikron Danfoss in a written document signed by authorized representatives of Semikron Danfoss, Semikron Danfoss products may not be used in any applications where a failure of the product or any consequences of the use thereof can reasonably be expected to result in personal injury.
No representation or warranty is given and no liability is assumed with respect to the accuracy, completeness and/or use of any information herein, including without limitation, warranties of non-infringement of intellectual property rights of any third party. Semikron Danfoss does not convey any license under its or a third party's patent rights, copyrights, trade secrets or other intellectual property rights, neither does it make any representation or warranty of non-infringement of intellectual property rights of any third party which may arise from a user's applications. This document supersedes and replaces all previous Semikron Danfoss information of comparable content and scope. Semikron Danfoss may update and/or revise this document at any time.

Semikron Danfoss International GmbH
Sigmundstrasse 200, 90431 Nuremberg, Germany
Tel: +49 911 65596663
sales@semikron-danfoss.com, www.semikron-danfoss.com